HEALTHRIDER

USER'S MANUAL

Model No. : HRIVEL87514.0
Serial No _____

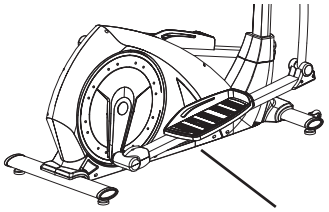

Write the serial number in the space above for reference.

QUESTIONS ?

If you have questions, or if there are missing parts, please contact us:

From UK: 08457 089 009
From Ireland: 053 92 36102

Website: www.iconsupport.eu

E-mail UK: csuk@iconeurope.com

For our postal address and opening hours, please check the information in your warranty card

⚠ **REGISTER your details online at www.iconsupport.eu to validate the warranty on your product**

⚠ CAUTION

Read all precautions and instructions in this manual before using this equipment. Keep this manual for future reference.

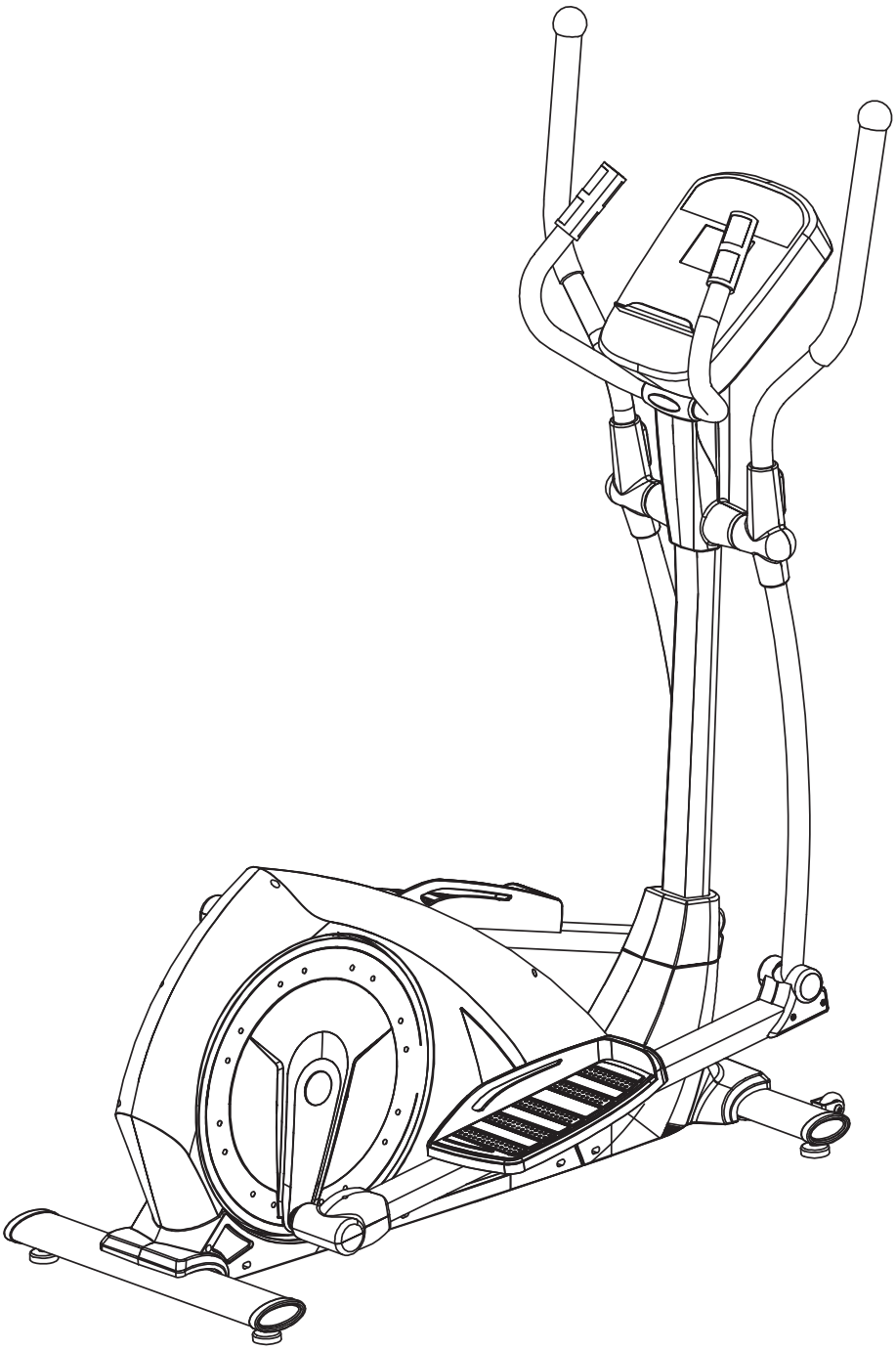

Visit our website
www.iconsupport.eu

TABLE OF CONTENTS

WARNING DECAL PLACEMENT 2
IMPORTANT PRECAUTIONS 3
BEFORE YOU BEGIN 4
ASSEMBLY. 4
HOW TO OPERATE THE ELLIPTICAL. 8
FEATURES OF THE CONSOLE 9
MAINTENANCE AND TROUBLESHOOTING. 15
EXERCISE GUIDELINES 16
EXPLODED DRAWINGS.. 17
PART LIST 19
ORDERING REPLACEMENT PARTS.. . . . . .Last Page

WARNING DECAL PLACEMENT

This drawing shows the location(s) of the warning decal(s). If a decal is missing or illegible, call the telephone number on the front cover of this manual and request a free replacement decal. Apply the decal in the location shown. Note: The decal(s) may not be shown at actual size.

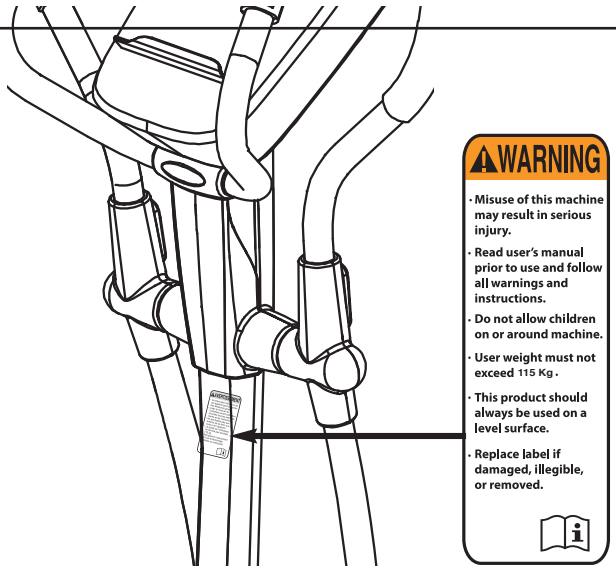

IMPORTANT PRECAUTIONS

⚠ WARNING : To reduce the risk of serious injury, read all important precautions and instructions in this manual and all warnings on your elliptical before using your elliptical. ICON assumes no responsibility for personal injury or property damage sustained by or through the use of this product.

1. Before beginning any exercise program, consult your physician. This is especially important for persons over age 35 or persons with pre-existing health problems.

2. Use the elliptical only as described in this manual.

3. It is the responsibility of the owner to ensure that all users of the elliptical are adequately informed of all precautions.

4. The elliptical is intended for home use only. Do not use the elliptical in a commercial, rental, or institutional setting.

5. Keep the elliptical indoors, away from moisture and dust. Place the elliptical on a level surface, with a mat beneath it to protect the floor or carpet. Make sure that there is at least 3 ft. (0.9 m) of clearance in the front and rear of the elliptical and 2 ft. (0.6 m) on each side.

6. Inspect and properly tighten all parts regularly. Replace any worn parts immediately.

7. Keep children under age 12 and pets away from the elliptical at all times.

8.The elliptical should not be used by persons weighing more than 250 lbs. (115 kg).

9. Wear appropriate clothes while exercising; do not wear loose clothes that could become caught on the elliptical. Always wear athletic shoes for foot protection while exercising.

10. Hold the handlebars or the upper body arms when mounting, dismounting, or using the elliptical.

11. The pulse sensor is not a medical device. Various factors may affect the accuracy of heart rate readings. The pulse sensor is intended only as an exercise aid in determining heart rate trends in general.

12. The elliptical does not have a freewheel; the pedals will continue to move until the flywheel stops. Reduce your pedaling speed in a controlled way.

13. Keep your back straight while using the elliptical; do not arch your back.

14. Over exercising may result in serious injury or death. If you feel faint or if you experience pain while exercising, stop immediately and cool down.

BEFORE YOU BEGIN

Thank you for purchasing the Healthrider® Cross Trainer 950. The elliptical provides an array of features designed to make your workouts at home more effective and enjoyable.

For your benefit, read this manual carefully before you use the elliptical. If you have questions after reading this manual, please see the front cover of this manual. To help us assist you, note the product model number and serial number before contacting us. The model number is HRIVEL87514.0 and the location of the serial number decal are shown on the front cover of this manual.

Before reading further, please familiarize yourself with the parts that are labeled in the drawing below.

ASSEMBLY

Assembly requires two persons. Place all parts of the elliptical exerciser in a cleared area and remove the packing materials. Do not dispose of the packing materials until assembly is completed.

In addition to the included tool(s), assembly requires a Phillips screwdriver and an adjustable wrench.

As you assemble the exercice bike, use the drawings below to identify small parts. The number in parentheses below each drawing is the key number of the part, from the PART LIST near the end of this manual. The number following the parentheses is the quantity needed for assembly.
Note: If a part is not in the hardware kit, check to see if it has been preassembled.

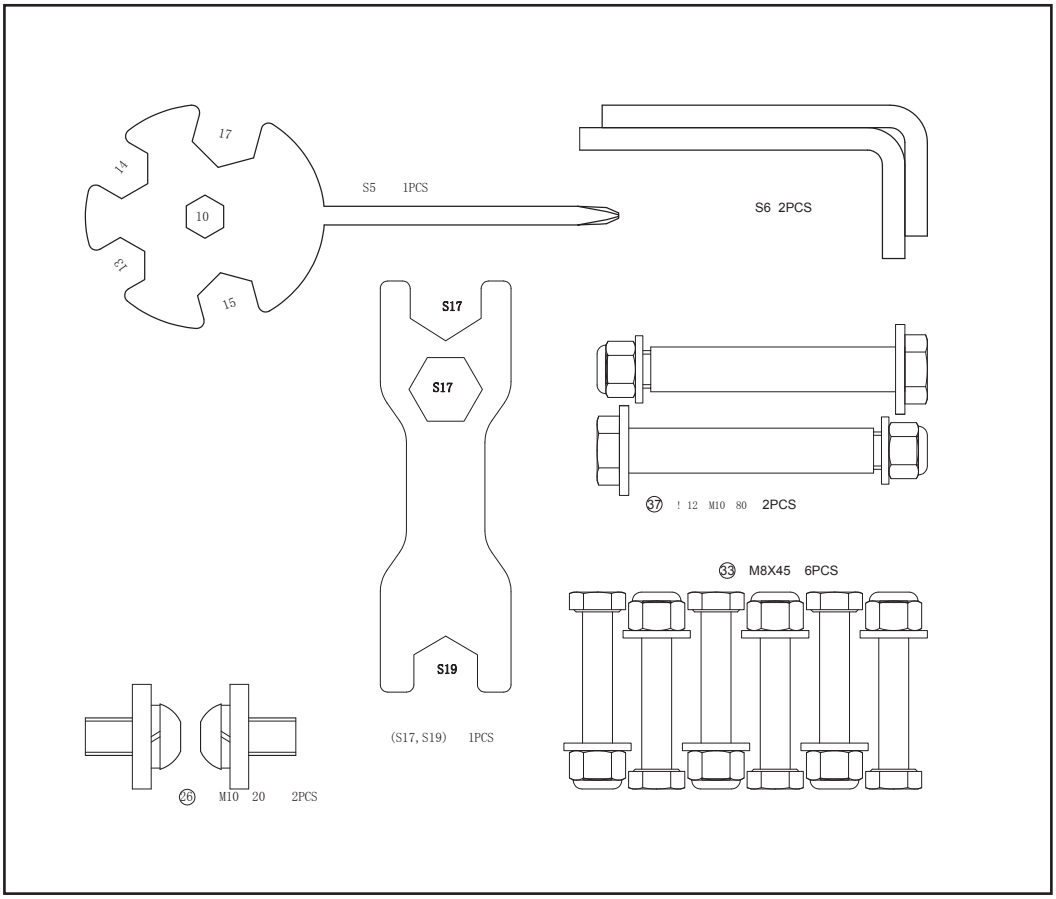

STEP 1

Install the Front bottom tube (2) and Rear bottom tube (3) to the Main frame (1) with the Allen bolt (17), Spring washer (18) and Arc washer (16) as shown.

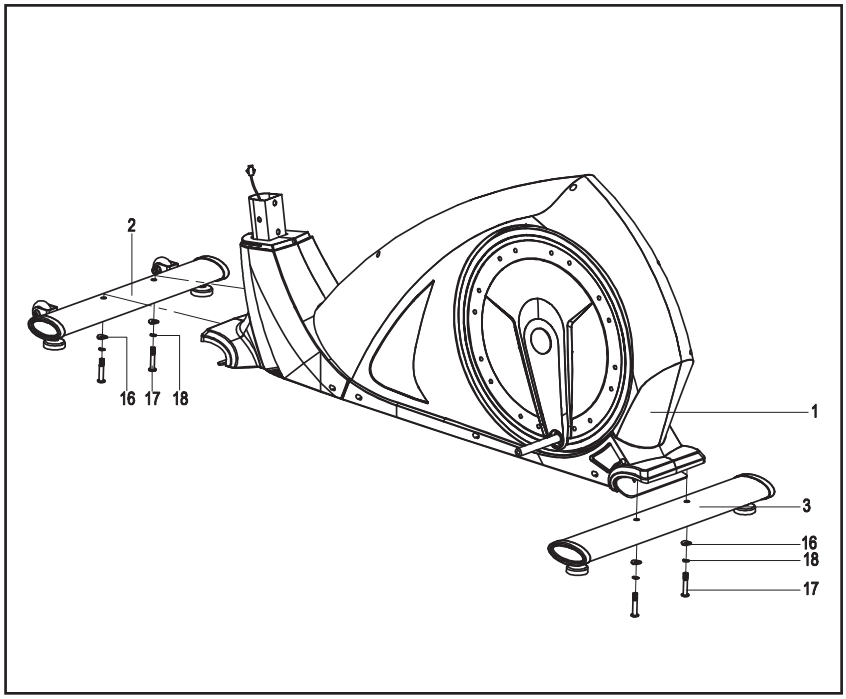

STEP 2

A: Sleeve the Mast cover (58) onto the Handlebar post (4)

B: Connect the Extension wire (50) with Sensor wire (57) properly at first, and then lock the Handlebar post (4) onto the Main frame (1) with the Allen bolt (53), Spring washer (18) and Flat washer (12) as shown;

C: Sleeve down the Mast cover (58) and lock it tightly.

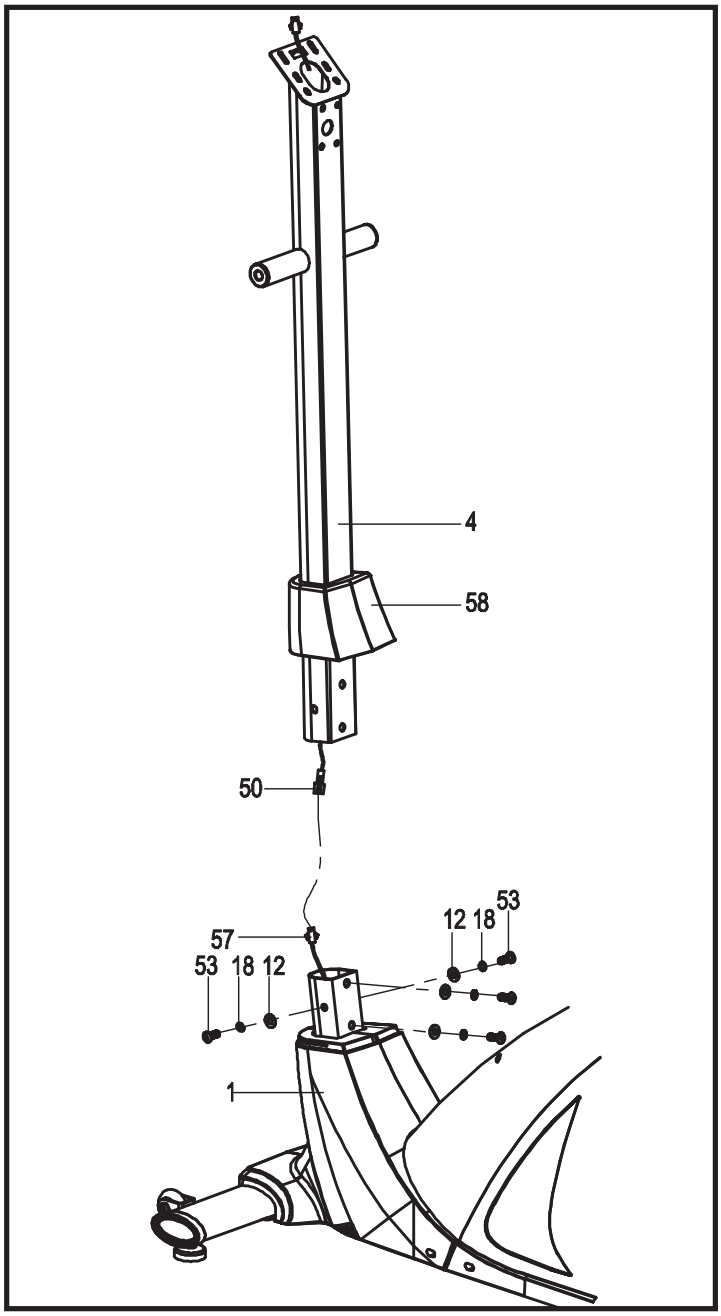

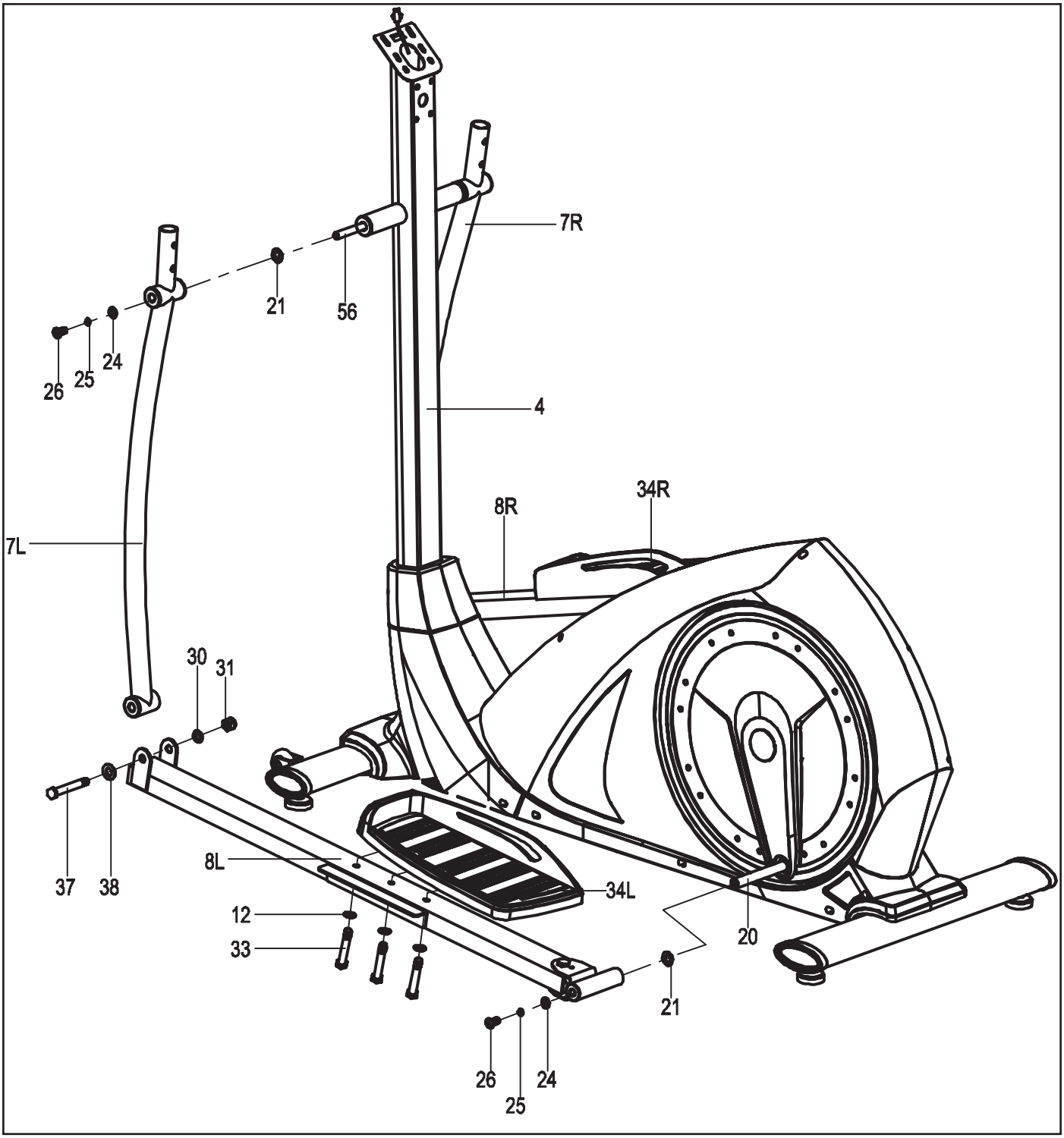

STEP 3

A: Insert the Long shaft (56) to the Handlebar post (4), attach the Swing tube (7L/R) on the Long shaft (56) with Allen bolt (26), Spring washer (25), D-shape washer (24) and Wave washer (21). Not to tighten till now.

B: Lock the Pedal (34L/R) on the Pedal support (8L/R) tightly with Hex bolt (33), Flat washer (12) .

C: Fix the Pedal support (8L/R) on the Crank (20) with Allen bolt (26), Spring washer (25), D-shape washer (24) and Wave washer (21). Not to tighten till now.

D: Connect the Swing tube (7L/R) and Pedal support (8L/R) together with the bolt (37), Flat washer (38), Flat washer (30) and Nylon nut (31) as shown. And then lock the above mentioned Allen bolt (26), Bolt (37) and Nylon nut (31) tightly.

STEP 4

A: Lock the Handlebar (6L/R) onto the Swing tube (7L/R) tightly with Carriage bolt (44), Arc washer (43) and Nylon nut (13).

B: Thread the Hand Pulse wire (55) into the hole of Handlebar post (4) and then takes it out from the computer bracket on top as shown.

C: Lock the fixed Handlebar (5) onto the Handlebar post (4) tightly with the Allen bolt (53) and Spring washer (18).

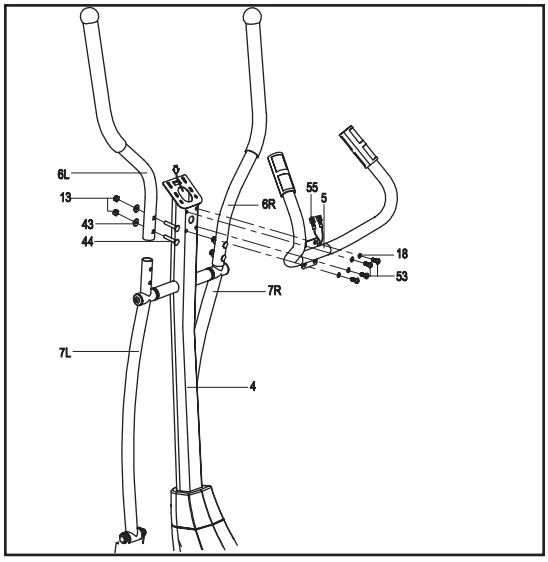

STEP 5

A: Fix the Protective guard (42A/B) onto the Swing tube (7L/R) with the Tapping Screw (41)

B: Fix the Protective guard (36L/R) onto the connection of Swing tube (7L/R) and Pedal support (8L/R) with the Tapping Screw (35)

C: Fix the Protective guard (28A/B) onto the Pedal tube joint (23L/R) with the Phillips Screw (27).

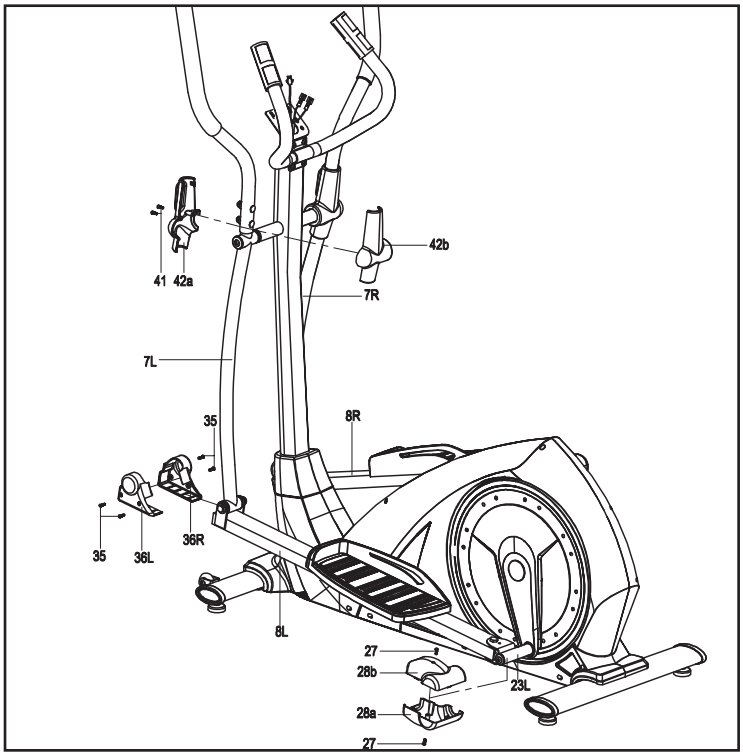

STEP 6

A: First, insert the Extension wire (50), Hand pulse wire (55) to the hole in back of Console (47) properly, then fix the Console (47) on the bracket of the Handlebar post (4) with Phillips Screw (52) and Flat washer (97)

B: Lock the Protective guard (51A/B) on the Handlebar post (4) with the Tapping Screw (35) as shown

C: Insert the Adapter (54) into bike and connect with DC line (99).

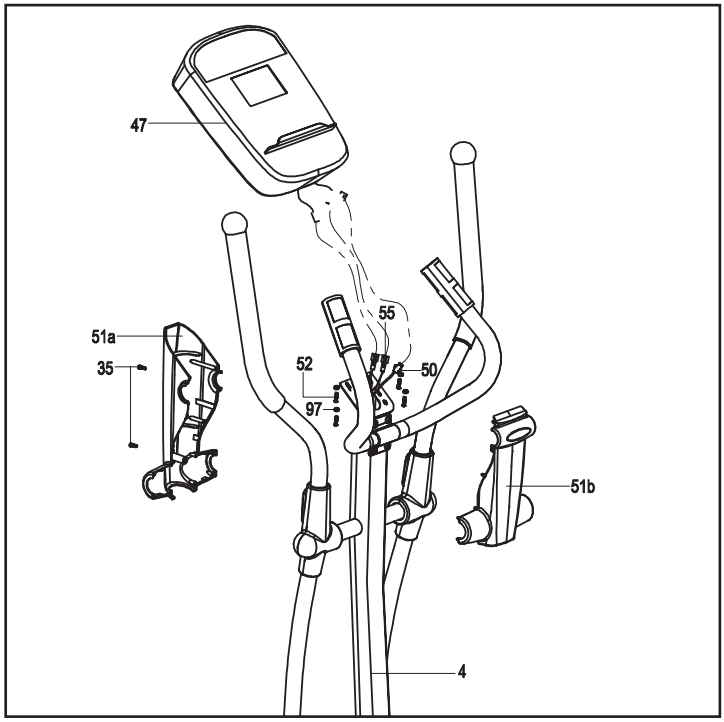

HOW TO USE THE ELLIPTICAL

HOW TO EXERCISE ON THE ELLIPTICAL EXERCISER

To mount the elliptical exerciser, hold the upper body arms and step onto the pedal that is in the lowest position. Then, step onto the other pedal. Push the pedals until they begin to move with a continuous motion.

Note: The pedal discs can turn in either direction. It is recommended that you move the pedal discs in the direction shown by the arrow;
however, for variety, you may turn the pedal discs in the opposite direction.

The upper body arms are designed to add upper-body exercise to your workouts. As you exercise, push and pull the upper body arms to work your arms, shoulders, and back. To focus on lower-body exercise, hold the upper body arms but do not push or pull them as you exercise.

To dismount the elliptical exerciser, wait until the pedals come to a complete stop. Note: The elliptical exerciser does not have a free wheel; the pedals will continue to move until the flywheel stops.
When the pedals are stationary, step off the highest pedal first. Then, step off the lower pedal.

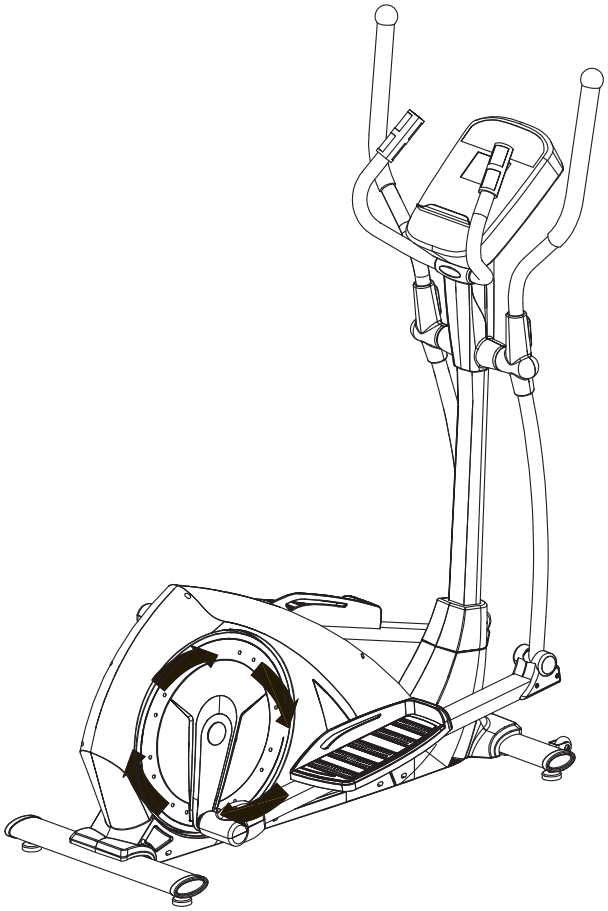

MEASURE YOUR HEART RATE IF DESIRED

You can measure you heart rate using either the handgrip pulse sensor or the optional chest pulse sensor.
Note: If you hold the handgrip pulse sensor and wear the chest pulse sensor at the same time, the console will not display your heart rate accurately.
If there are sheets of clear plastic on the metal contacts on the handgrip pulse sensor, remove the plastic. In addition, make sure that your hands are clean. To measure your heart rate, hold the handgrip pulse sensor with your palms resting against the metal contacts. Avoid moving your hands or gripping the contacts tightly.

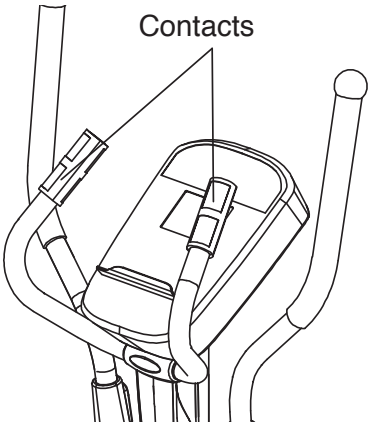

When you are finished exercising

If the pedals do not move for several minutes and the buttons are not pressed, the console will turn off and the display will be resetéconomies des piles.

CONSOLE DIAGRAM

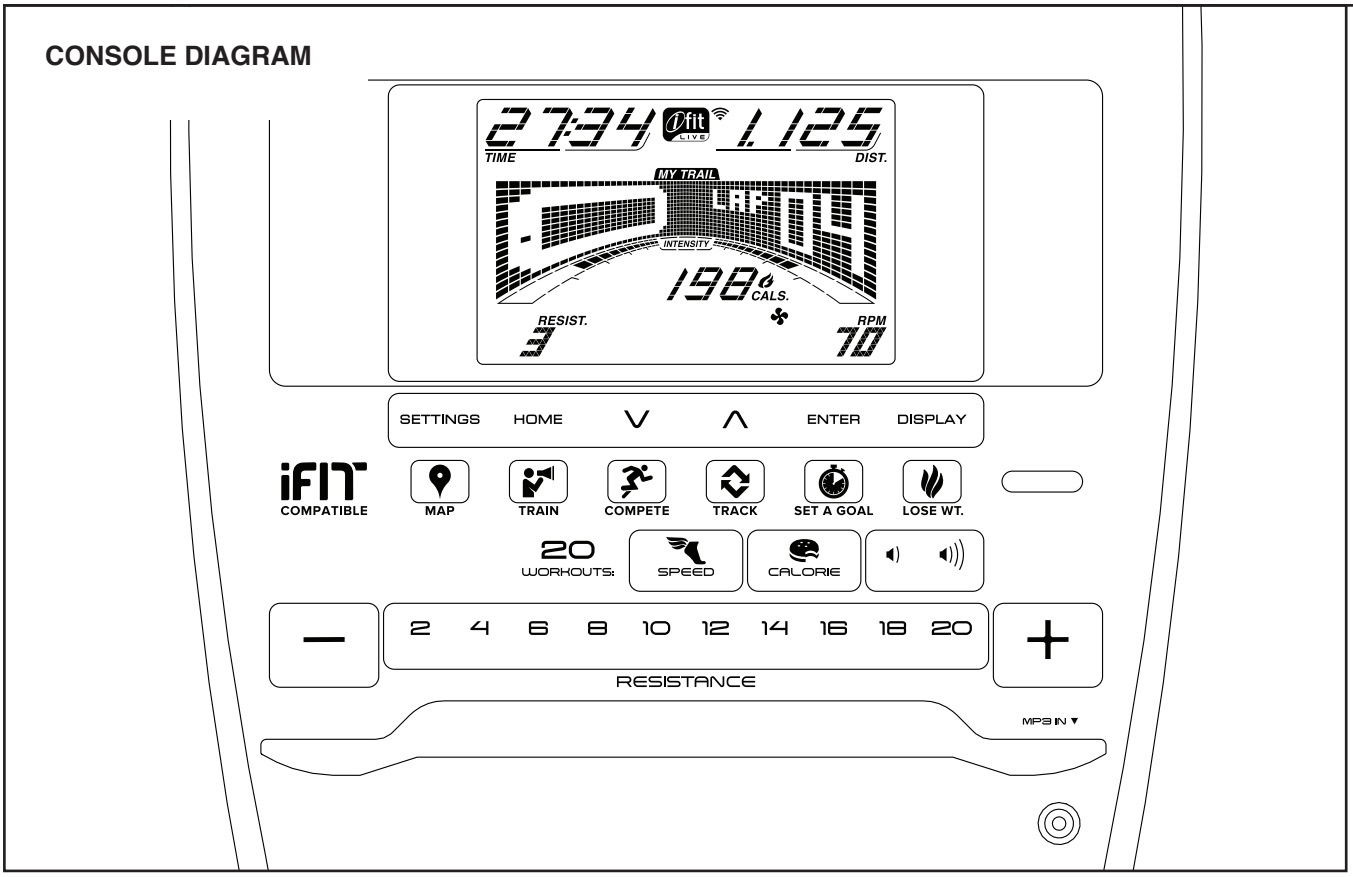

MAKE YOUR FITNESS GOALS A REALITY WITH IFIT.COM

With your new iFit-compatible fitness equipment, you can use an array of features on iFit.com to make your fitness goals a reality:

Exercise anywhere in the world with customizable Google Maps.

Download training workouts designed to help you reach your personal goals.

Measure your progress by competing against other users in the iFit community.

Upload your workout results to the iFit cloud and track your accomplishments.

Set calorie, time, or distance goals for your workouts.

Choose and download sets of weight-loss workouts.

Go to iFit.com to learn more.

FEATURES OF THE CONSOLE

The advanced console offers an array of features designed to make your workouts more effective and enjoyable.

When you use the manual mode, you can change the resistance of the pedals with the touch of a button. While you exercise, the console will display continuous exercise feedback. You can also measure your heart rate using the handgrip heart rate monitor or the optional chest heart rate monitor **(see page 21 for information about the optional chest heart rate monitor)**.

The console also offers a selection of onboard workouts. Each workout automatically changes the resistance of the pedals as it guides you through an effective workout. You can also set a calorie, distance, or time goal.

The console also features an iFit mode that enables the console to communicate with your wireless network through an optional iFit module. With the iFit mode, you can download personalized workouts, create your own workouts, track your workout results, race against other iFit users, and access many other features. **To purchase an iFit module at any time, go to www.iFit.com or call the telephone number on the front cover of this manual.**

You can even connect your MP3 player or CD player to the console sound system and listen to your favorite music or audio books while you exercise.

To use the manual mode, see page 15. **To use an onboard workout,** see page 18. **To use a set-a-goal workout,** see page 19. **To use an iFit workout,** see page 20. **To use the sound system,** see page 21. **To change console settings,** see page 22.

Note: If there is a sheet of plastic on the display, remove the plastic.

HOW TO USE THE MANUAL MODE

1. **Begin pedaling or press any button on the console to turn on the console.**

   When you turn on the console, the display will turn on. The console will then be ready for use.

2. **Select the manual mode.**

   Press the Home button or press either the Speed button or the Calorie button repeatedly to select the manual mode.

   If a wireless iFit module is not inserted into the console and connected to iFit, the manual mode will be selected automatically.

3. **Change the resistance of the pedals as desired.**

   As you pedal, change the resistance of the pedals by pressing the Resistance increase and decrease buttons or by pressing one of the numbered Resistance buttons.

   Note: After you press a button, it will take a moment for the pedals to reach the selected resistance level.

4. **Follow your progress with the display.**

   The display can show the following workout information:

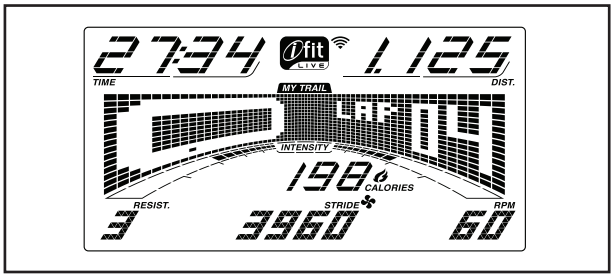

Calories (Cals.)—This display mode will show the approximate number of calories you have burned.

Calories per Hour (Cals./Hr)—This display mode will show the approximate number of calories you are burning per hour.

Distance (Dist.)—This display mode will show the distance that you have pedaled in miles or kilometers.

Pulse—This display mode will show your heart rate when you use the handgrip heart rate monitor or the optional chest heart rate monitor (see step 5).

Resistance (Resist.)—This display mode will show the resistance level of the pedals for a few seconds each time the resistance level changes.

RPM—This display mode will show your pedaling speed in revolutions per minute (rpm).

Stride—This display mode will show the total number of strides you have pedaled.

Time—When the manual mode is selected, this display mode will show the elapsed time. When a workout is selected, this display mode will show the time remaining in the workout.

The matrix offers several display tabs. Press the Display button repeatedly until the desired tab is shown. You can also press the increase and decrease buttons next to the Enter button.

Speed—This tab will show a profile of the speed settings of the workout. A new segment will appear at the end of each minute.

My Trail—This tab will show a track that represents 1/4 mile (400 m). As you exercise, the flashing rectangle will show your progress. The My Trail tab will also show the number of laps you complete.

Calorie—This tab will show the approximate amount of calories you have burned. The height of each segment represents the amount of calories burned during that segment.

As you exercise, the workout intensity level bar will indicate the approximate intensity level of your exercise.

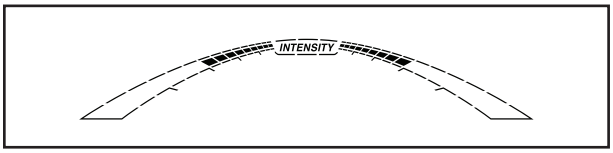

Press the Home button to exit the workout and return to the default menu (see HOW TO CHANGE CONSOLE SETTINGS on page 22 to set the default menu). If necessary, press the Home button again.

When a wireless iFit module is connected, the wireless symbol at the top of the display will show the strength of your wireless signal. Four arcs indicate full signal strength.

Change the volume level of the console by pressing the volume increase and decrease buttons.

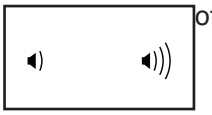

5. **Measure your heart rate if desired.**

You can measure your heart rate using either the handgrip heart rate monitor or an optional chest heart rate monitor **(see page 21 for information about the optional chest heart rate monitor)**.

Note: If you use both heart rate monitors at the same time, the console will not display your heart rate accurately.

If there are sheets of plastic on the metal contacts on the handgrip heart rate monitor, remove the plastic. To measure your heart rate, hold the handgrip heart rate monitor with your palms resting against the contacts. **Avoid moving your hands or gripping the contacts tightly.**

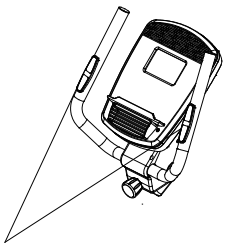

Contacts

When your pulse is detected, a heart symbol will flash in the display each time your heart beats, one or two dashes will appear, and then your heart rate will be shown. **For the most accurate heart rate reading, hold the contacts for at least 15 seconds.**

If the display does not show your heart rate, make sure that your hands are positioned as described. Be careful not to move your hands excessively or to squeeze the contacts tightly. For optimal performance, clean the contacts using a soft cloth; **never use alcohol, abrasives, or chemicals to clean the contacts.**

6. **When you are finished exercising, the console will turn off automatically.**

If the pedals do not move for several seconds, a series of tones will sound, the console will pause, and the time will flash in the display.

If the pedals do not move for several minutes, the console will turn off and the display will be reset.

Note: The console features a display demo mode, designed to be used if the elliptical is displayed in a store. When the demo mode is turned on, the console will show a preset presentation. To turn off the demo mode, see HOW TO CHANGE CONSOLE SETTINGS on page 22.

HOW TO USE AN ONBOARD WORKOUT

1. **Begin pedaling or press any button on the console to turn on the console.**
When you turn on the console, the display will turn on. The console will then be ready for use.

2. **Select an onboard workout.**
To select an onboard workout, press the Speed button or the Calorie button repeatedly until the desired workout appears in the display.

When you select an onboard workout, the display will show the duration of the workout and the name of the workout. A profile of the speed settings of the workout will appear in the matrix.

The display will also show the maximum pedaling speed (rpm) and the maximum resistance level.

3. **Begin pedaling to start the workout.**
Each workout is divided into one-minute segments. One resistance level and one target rpm (speed) are programmed for each segment. Note: The same resistance level and/or target rpm may be programmed for consecutive segments.

The resistance level and the target rpm for the first segment will appear in the matrix.

During the workout, the profile on the speed tab will show your progress. The flashing segment

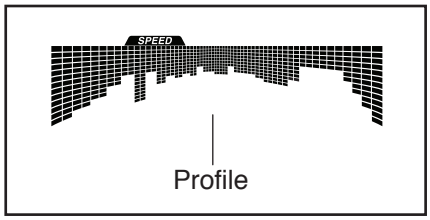

of the profile represents the current segment of the workout. The height of the flashing segment indicates the target rpm for the current segment.

At the end of each segment of the workout, a series of tones will sound and the next segment of the profile will begin to flash. If a different resistance level and/or target rpm is programmed for the next segment, the resistance level and/or target rpm will appear in the display for a few seconds to alert you. The resistance of the pedals will then change.

As you exercise, you will be prompted to keep your pedaling speed near the target rpm for the current segment. **When an upward-pointing arrow appears in the display,** increase your pace. **When a downward-pointing arrow appears,** decrease your pace. **When no arrow appears,** maintain your current pace.

IMPORTANT: The target rpm is intended only to provide motivation. Your actual pedaling speed may be slower than the target rpm. Make sure to pedal at a speed that is comfortable for you.

If the resistance level for the current segment is too high or too low, you can manually override the setting by pressing the Resistance buttons. **IMPORTANT: When the current segment of the workout ends, the pedals will automatically adjust to the resistance level programmed for the next segment.**

The workout will continue in this way until the last segment ends. To stop the workout at any time, stop pedaling. The time will flash in the display. To resume the workout, simply resume pedaling.

4. **Follow your progress with the display.**

   See step 4 on page 15.

5. **Measure your heart rate if desired.**

   See step 5 on page 16.

6. **When you are finished exercising, the console will turn off automatically.**

   See step 6 on page 17.

HOW TO USE A SET-A-GOAL WORKOUT

1. **Begin pedaling or press any button on the console to turn on the console.**

   When you turn on the console, the display will turn on. The console will then be ready for use.

2. **Set a calorie, distance, or time goal.**

   To set a calories, distance, or time goal, first press the Set A Goal button.

   Next, press the increase and decrease buttons next to the Enter button until the name of the desired goal appears in the display. Then, press the Enter button.

   Then, press the increase and decrease buttons next to the Enter button to set the desired goal.

3. **Begin pedaling to start the workout.**

   Each workout is divided into one-minute segments.

   You can manually change the resistance of the pedals as desired during the workout by pressing the Resistance buttons.

   Note: If you manually change the resistance level during a calorie goal workout, the length of the workout may adjust automatically to ensure that you meet your calorie goal.

   . **Note: The calorie goal is an estimate of the number of calories that you will burn during the workout. The actual number of calories that you burn will depend on various factors such as your weight. In addition, if you manually change the resistance level during the workout, the number of calories you burn will be affected.**

   The workout will continue in this way until the calorie, distance, or time goal is reached. To pause the workout, stop pedaling. The time will pause in the display. To resume the workout, simply resume pedaling.

4. **Follow your progress with the display.**

   As you exercise, the calories, time, or distance display will count down until the desired goal is reached.

   See step 4 on page 15.

5. **Measure your heart rate if desired.**

   See step 5 on page 16.

6. **When you are finished exercising, the console will turn off automatically.**

   See step 6 on page 17.

   Press the Map button, the Train button, or the Lose Wt. button to download the next workout of that type in your schedule.

   Press the Compete button to compete in a race that you have previously scheduled.

   Press the Track button to re-run a recent iFit workout from your schedule. Next, press the increase and decrease buttons to select the desired workout. Then, press the Enter button to start the workout.

   To use a set-a-goal workout, press the Set A Goal button (see page 19).

HOW TO USE AN IFIT WORKOUT

You must have an iFit module to use an iFit workout. **To purchase an iFit module at any time, go to www.iFit.com or call the telephone number on the front cover of this manual.**

Note: To use an iFit module, you must have access to a computer with an internet connection and a USB port. You will also need an iFit.com membership. To use a wireless iFit module, you must also have your own wireless network including an 802.11b/g/n router with SSID broadcast enabled (hidden networks are not supported).

1. **Begin pedaling or press any button on the console to turn on the console.**

   When you turn on the console, the display will turn on. The console will then be ready for use.

2. **Insert the iFit module into the console.**

   To use an iFit workout, make sure that the iFit module is inserted in the console.

   IMPORTANT: To satisfy exposure compliance requirements, the antenna and transmitter in the iFit module must be at least 8 in. (20 cm) from all persons and must not be near or connected to any other antenna or transmitter.

3. **Select a user.**

   If more than one user is registered on your iFit account, you can switch users in the iFit main screen. Press the increase and decrease buttons next to the Enter button to select a user.

4. **Select an iFit workout.**

   To select an iFit workout, press one of the iFit buttons. Before some workouts will download, you must add them to your schedule on www.iFit.com.

   Press the Map button, the Train button, or the Lose Wt. button to download the next workout of that type in your schedule.

   Press the Compete button to compete in a race that you have previously scheduled.

   Press the Track button to re-run a recent iFit workout from your schedule. Next, press the increase and decrease buttons to select the desired workout. Then, press the Enter button to start the workout.

   To use a set-a-goal workout, press the Set A Goal button (see page 19).

   For more information about the iFit workouts, please see www.iFit.com.

   When you select an iFit workout, the display will show the duration of the workout and the approximate number of calories you will burn. The display may also show the name of the workout. If you select a competition workout, the display may count down to the beginning of the race.

   Note: The iFit buttons may also run demo workouts. To use the demo workouts, remove the iFit module from the console and press one of the iFit buttons.

5. **Start the workout.**

   See step 3 on page 18.

   During some workouts, an audio coach will guide you through your workout. You can select a setting for the audio coach (see HOW TO CHANGE CONSOLE SETTINGS on page 22). To stop the workout at any time, stop pedaling.The time will flash in the display. To resume the workout, simply resume pedaling.

6. **Follow your progress with the display.**

   See step 4 on page 15.

   The My Trail tab will show a map of the trail or it will show a track and the number of laps you complete.

   During a competition workout, the Compete tab will show your progress in the race. As you race, the top line in the matrix will show how much of the race you have completed. The other lines will show other competitors. The end of the matrix represents the end of the race.

7. **Measure your heart rate if desired.**

   See step 5 on page 16.

8. **When you are finished exercising, the console will turn off automatically.**

   See step 6 on page 17.

For more information about the iFit mode, go to www.iFit.com.

HOW TO USE THE SOUND SYSTEM

To play music or audio books through the console sound system while you exercise, plug a 3.5 mm male to 3.5 mm male audio cable (not included) into the jack on the console and into a jack on your MP3 player, CD player, or other personal audio player; **make sure that the audio cable is fully plugged in. Note: To purchase an audio cable, see your local electronics store.**

Next, press the play button on your personal audio player. Adjust the volume level using the volume increase and

decrease buttons on the console or the volume control on your personal audio player.

THE OPTIONAL CHEST HEART RATE MONITOR

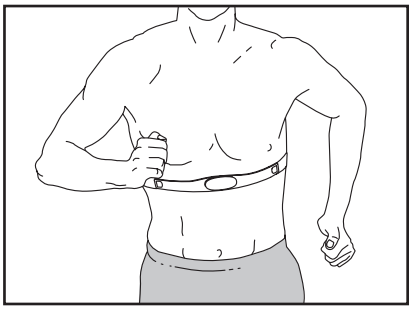

Whether your goal is to burn fat or to strengthen your cardiovascular system, the key to achieving the best results is to maintain the proper heart rate during your workouts. The optional chest heart rate monitor will enable you to continuously monitor your heart rate while you exercise, helping you to reach your personal fitness goals. **To purchase a chest heart rate monitor and receiver, please see the front cover of this manual.**

HOW TO CHANGE CONSOLE SETTINGS

1. **Select the settings mode.**

   To select the settings mode, press and hold the Settings button until the settings information appears in the display.

   The display will show the total number of hours that the elliptical has been used and the total distance (in miles or kilometers) that has been pedaled on the elliptical.

   If an iFit module is connected to the console, the display will show the words WIFI MODULE or USB MODULE.

   If no module is connected, the display will show the words NO IFIT MODULE. If no module is connected, some of the settings options will not be available.

2. **Navigate the settings mode.**

   While the settings mode is selected, the matrix of the display will display several optional screens. Press the decrease button next to the Enter button repeatedly to select the desired optional screen.

   The lower section of the display will show instructions for the selected screen. **Make sure to follow the instructions shown in the lower part of the display.**

3. **Change settings as desired.**

   Units—The currently selected unit of measurement will appear in the display. To change the unit of measurement, press the Enter button repeatedly. To view distance in miles, select ENGLISH. To view distance in kilometers, select METRIC.

   Demo—The console features a display demo mode, designed to be used if the elliptical is displayed in a store. Press the Enter button repeatedly to turn the demo mode ON or OFF.

   Contrast Level—The currently selected contrast level will appear in the display. Press the Resistance increase and decrease buttons to adjust the contrast level.

   Trainer Voice—The currently selected setting for the audio coach will appear in the display. Press the Enter button repeatedly to turn the audio coach ON or OFF.

   Default Menu—The default menu will appear when you press the Home button. Press the Enter button repeatedly to select the manual mode or the iFit menu as the default menu.

   Check Status—The words CHECK WIFI STATUS or CHECK USB STATUS will appear in the display. Press the Enter button. After a few seconds, the status of the iFit module will appear in the display. To exit this display, press the Settings button.

   Send/Receive—The words SEND/RECEIVE DATA will appear in the display. Press the Enter button. The console will then check for iFit workouts and firmware downloads.

4. **Exit the settings mode.**

   Press the Settings button to exit the settings mode.

HOW TO CHANGE CONSOLE SETTINGS

1. **Select the settings mode.**

   To select the settings mode, press and hold the Settings button until the settings information appears in the display.

   The display will show the total number of hours that the elliptical has been used and the total distance (in miles or kilometers) that has been pedaled on the elliptical.

   If an iFit module is connected to the console, the display will show the words WIFI MODULE or USB MODULE.

   If no module is connected, the display will show the words NO IFIT MODULE. If no module is connected, some of the settings options will not be available.

2. **Navigate the settings mode.**

   While the settings mode is selected, the matrix of the display will display several optional screens. Press the decrease button next to the Enter button repeatedly to select the desired optional screen.

The lower section of the display will show instructions for the selected screen. **Make sure to follow the instructions shown in the lower part of the display.**

3. **Change settings as desired.**

Units—The currently selected unit of measurement will appear in the display. To change the unit of measurement, press the Enter button repeatedly. To view distance in miles, select ENGLISH. To view distance in kilometers, select METRIC.

Demo—The console features a display demo mode, designed to be used if the elliptical is displayed in a store. Press the Enter button repeatedly to turn the demo mode ON or OFF.

Contrast Level—The currently selected contrast level will appear in the display. Press the Resistance increase and decrease buttons to adjust the contrast level.

Trainer Voice—The currently selected setting for the audio coach will appear in the display. Press the Enter button repeatedly to turn the audio coach ON or OFF.

Default Menu—The default menu will appear when you press the Home button. Press the Enter button repeatedly to select the manual mode or the iFit menu as the default menu.

Check Status—The words CHECK WIFI STATUS or CHECK USB STATUS will appear in the display. Press the Enter button. After a few seconds, the status of the iFit module will appear in the display. To exit this display, press the Settings button.

Send/Receive—The words SEND/RECEIVE DATA will appear in the display. Press the Enter button. The console will then check for iFit workouts and firmware downloads.

4. **Exit the settings mode.**

Press the Settings button to exit the settings mode.

MAINTENANCE AND TROUBLESHOOTING

Inspect and tighten all parts of the exercise bike regularly.
Replace any worn parts immediately.
To clean the exercise bike, use a damp cloth and a small amount of mild soap.

IMPORTANT: To avoid damage to the console, keep liquids away from the console and keep the console out of direct sunlight.

EXERCISE GUIDELINES

⚠ WARNING:

Before beginning this or any exercise program, consult your physician. This is especially important for persons over the age of 35 or persons with pre-existing health problems. The pulse sensor is not a medical device. Various factors may affect the accuracy of heart rate readings. The pulse sensor is intended only as an exercise aid in determining heart rate trends in general.

These guidelines will help you to plan your exercise program. For detailed exercise information, obtain a reputable book or consult your physician. Remember, proper nutrition and adequate rest are essential for successful results.

EXERCISE INTENSITY

Whether your goal is to burn fat or to strengthen your cardiovascular system, exercising at the proper intensity is the key to achieving results. You can use your heart rate as a guide to find the proper intensity level. The chart below shows recommended heart rates for fat burning and aerobic exercise.

165	*155*	*145*	*140*	*130*	*125*	*115*	💗
145	*138*	*130*	*125*	*118*	*110*	*103*	💗
125	*120*	*115*	*110*	*105*	*95*	*90*	♥
20	*30*	*40*	*50*	*60*	*70*	*80*	

To find the proper intensity level, find your age at the bottom of the chart (ages are rounded off to the nearest ten years). The three numbers listed above your age define your "training zone." The lowest number is the heart rate for fat burning, the middle number is the heart rate for maximum fat burning, and the highest number is the heart rate for aerobic exercise.

Burning Fat—To burn fat effectively, you must exercise at a low intensity level for a sustained period of time. During the first few minutes of exercise, your body uses carbohydrate calories for energy. Only after the first few minutes of exercise does your body begin to use stored fat calories for energy. If your goal is to burn fat, adjust the intensity of your exercise until your heart rate is near the lowest number in your training one. For maximum fat burning, exercise with your heart rate near the middle number in your training zone.

Aerobic Exercise—If your goal is to strengthen your cardiovascular system, you must perform aerobic exercise, which is activity that requires large amounts of oxygen for prolonged periods of time. For aerobic exercise, adjust the intensity of your exercise until your heart rate is near the highest number in your training zone.

WORKOUT GUIDELINES

Warming Up—Start with 5 to 10 minutes of stretching and light exercise. A warm-up increases your body temperature, heart rate, and circulation in preparation for exercise.

Training Zone Exercise—Exercise for 20 to 30 minutes with your heart rate in your training zone. (During he first few weeks of your exercise program, do not keep your heart rate in your training zone for longer than 20 minutes.) Breathe regularly and deeply as you exercise–never hold your breath.

Cooling Down—Finish with 5 to 10 minutes of stretching. Stretching increases the flexibility of your muscles and helps to prevent post-exercise problems.

EXERCISE FREQUENCY

To maintain or improve your condition, complete three workouts each week, with at least one day of rest between workouts. After a few months of regular exercise, you may complete up to five workouts each week, if desired. Remember, the key to success is to make exercise a regular and enjoyable part of your everyday life.

EXPLODED DRAWING—Model No. HRIVEL87514.0 part 1

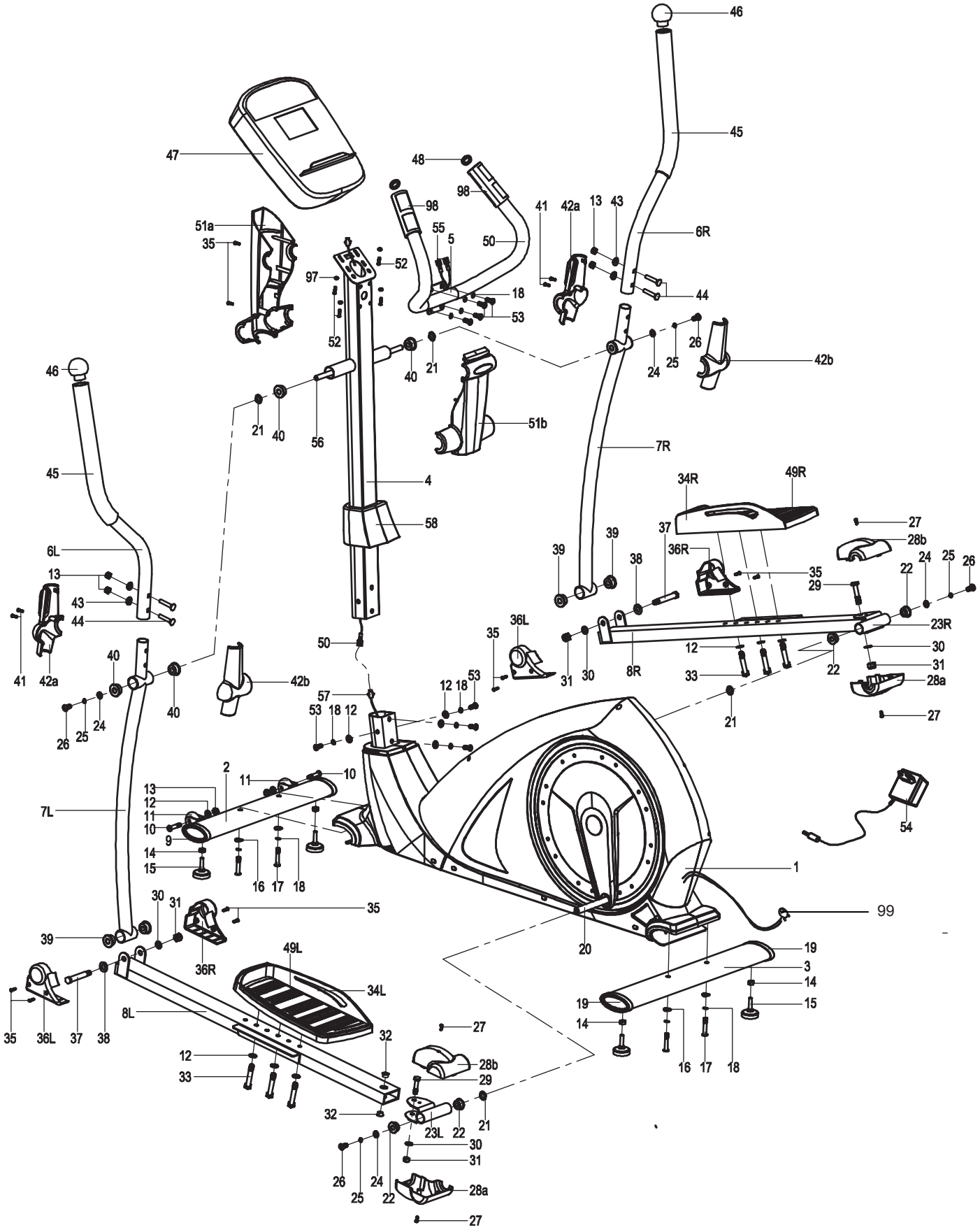

EXPLODED DRAWING—Model No. HRIVEL87514.0 part 2

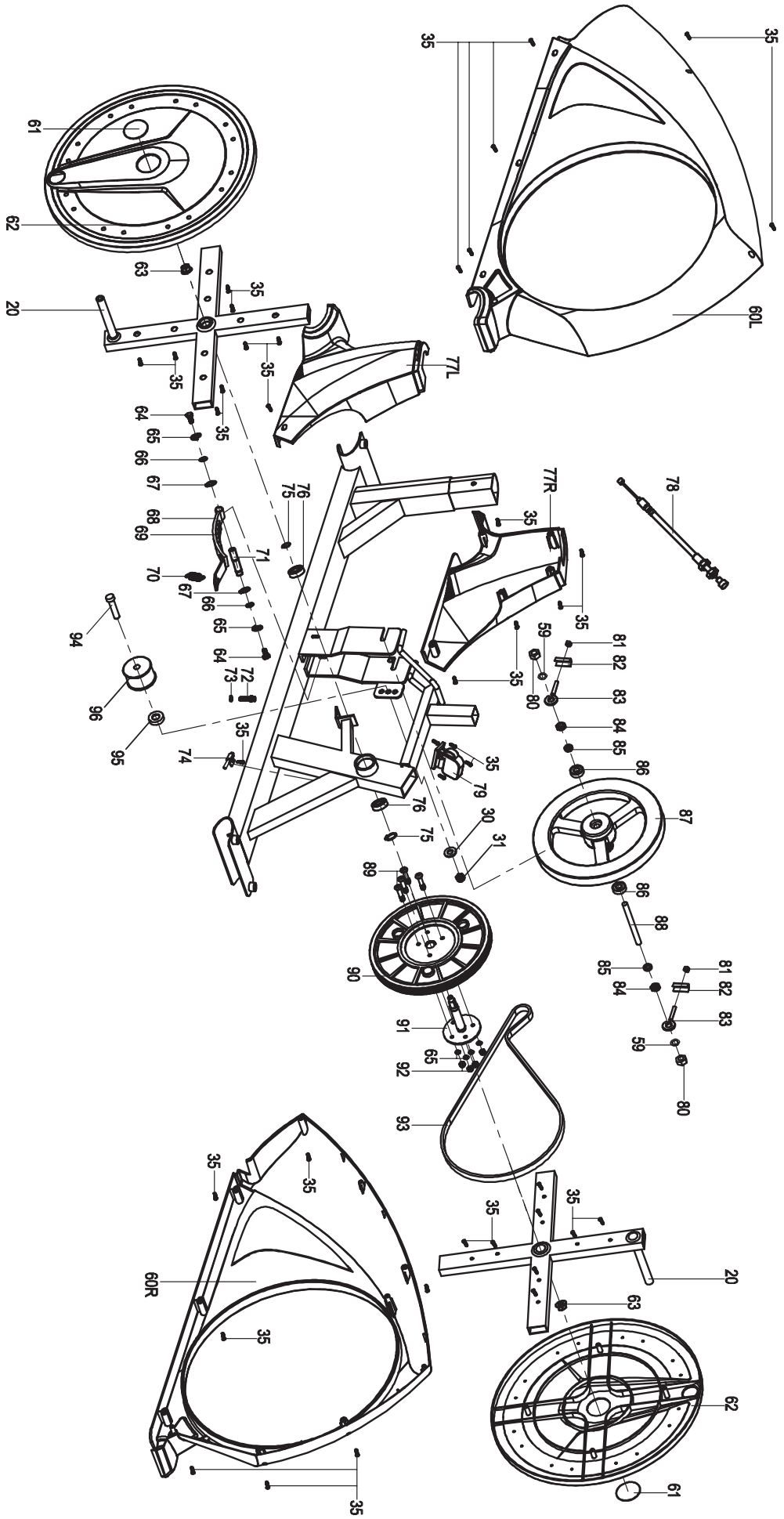

PART LIST—Model No. HRIVEL87514.0

N°	Qty.	Description
1	1	Main frame
2	1	Front bottom tube
3	1	Rear bottom tube
4	1	Handlebar post
5	1	Fixed handlebar
6	2	Handlebar
7	2	Swing tube
8	2	Pedal support
9	2	End cap
10	2	Hex screw M8x40xL12
11	2	Roller
12	12	Flat washer D8xΦ16x1.5
13	6	Nylon nut M8
14	4	Hex nut M10
15	4	Adjustable foot
16	4	Arc washer d8x2xΦ25XR39
17	4	Allen bolt M8xL58
18	12	Spring washer D8
19	2	End cap
20	2	Crank
21	4	Wave washer Φ17xΦ23x0.3
22	4	Plastic bushing
23	2	Pedal tube joint
24	4	D-shape washer
25	4	Spring washer D10
26	4	Allen bolt M10x20
27	4	Phillips screw M5x10
28	4	Protective guard
29	2	Hex bolt M10x55
30	5	Flat washer D10xΦ20x2
31	5	Nylon nut M10
32	4	Bushing Φ18xΦ10x11
33	6	Hex bolt M8x45
34	2	Pedal
35	50	Phillips Tapping Screw ST4.2x18
36	4.	Protective guard
37	2	Hex bolt Φ12xM10x80
38	2	Flat washer D12xΦ24x1.5
39	4	Bushing Φ12xΦ32x15
40	6	Plastic bushing Φ16xΦ31x23
41	4	Phillips Tapping Screw ST3.5x10
42	4	Protective guard
43	4	Arc washer D8xΦ19x1.5xR30
44	4	Carriage bolt M8xL45
45	2	Foam grip
46	2	Round cap
47	1	Console
48	2	Round cap
49	2	Pedal pad
50	1	Extension wire
51	2	Protective guard
52	4	Phillips Screw M4x12
53	8	Allen bolt M8x16
54	1	Adapter
55	2	Hand pulse wire
56	1	Long shaft
57	1	Sensor wire
58	1	Mast cover
59	2	Washer
60	2	Chain cover
61	2	Crank Disk cap
62	2	Crank Disk
63	2	Flange nut
64	2	Hex bolt
65	6	Spring washer
66	2	Flat washer
67	2	C-clip
68	1	Magnet holder
69	14	Magnet
70	1	Tension spring
71	1	Magnet holder axle
72	1	Hex bolt
73	2	Hex nut
74	1	Sensor
75	2	C-clip
76	2	Bearing
77	2	Front cover
78	1	Tension control cable
79	1	Motor
80	2	Hex nut
81	2	Hex nut
82	2	U-shape washer
83	2	Adjusting Bolt
84	2	Thin nut
85	2	Spacer
86	2	Bearing
87	1	Flywheel
88	1	Flywheel axle
89	4	Bolt
90	1	Pulley
91	1	Axle
92	4	Nylon nut
93	1	Driven Belt
94	1	Bolt M10x40
95	1	Spacer D10xΦ18x6
96	1	Idler wheel
97	4	Flat washer
98	2	Hand pulse
99	1	DC line

ORDERING REPLACEMENT PARTS

To order replacement parts, please see the front cover of this manual. To help us assist you, be prepared to provide the following information when contacting us:

• the model number and serial number of the product (see the front cover of this manual)

• the name of the product (see the front cover of this manual)

• the key number and description of the replacement part(s) (see the PART LIST and the EXPLODED DRAWING near the end of this manual)

IMPORTANT RECYCLING INFORMATION FOR E. U. CUSTOMERS

This electronic product must not be disposed of in municipal waste. To preserve the environment, this product must be recycled after its useful life as required by law. Please use recycling facilities that are authorized to collect this type of waste in your area. In doing so, you will help to conserve natural resources and improve European standards of environmental protection. If you require more information about safe and correct disposal methods, please contact your local city office or the establishment where you purchased this product.

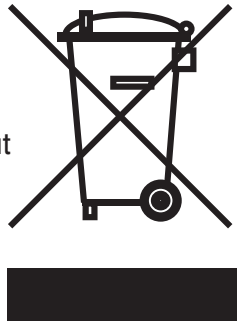

TECHNICAL SPECS.

Product dimensions : (L x l x h) : 145 x 57,5 x172 cm
Product weight: 51,2 Kg

Ref : M01220

Printed in China © 2014 Icon Health & Fitness, Inc.